TT Supply Type

New Colours

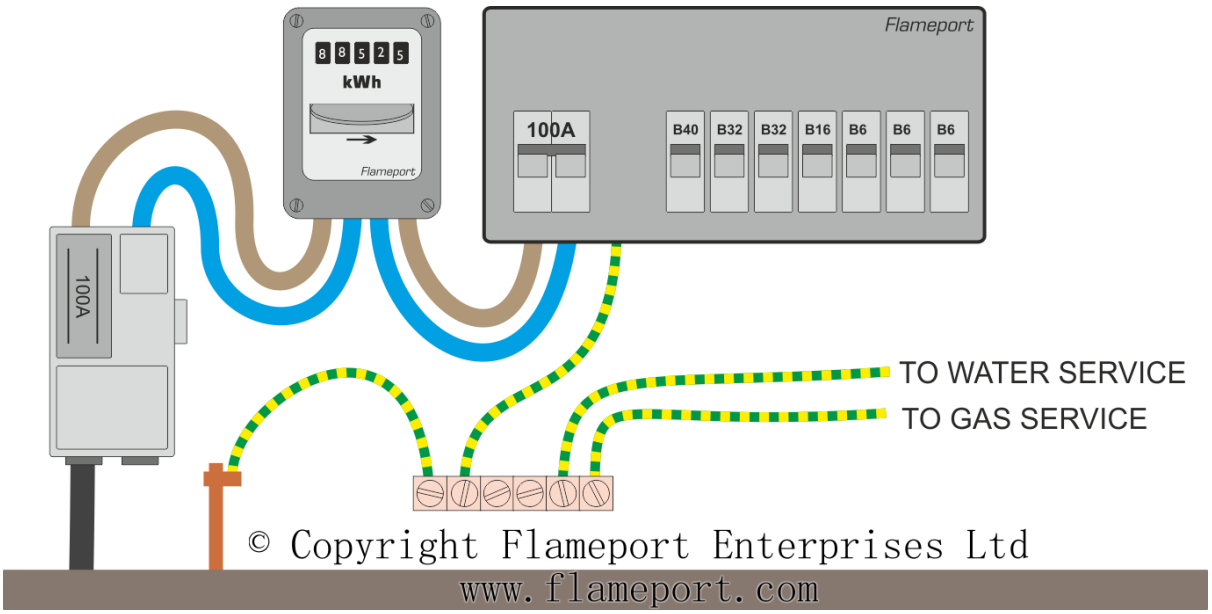
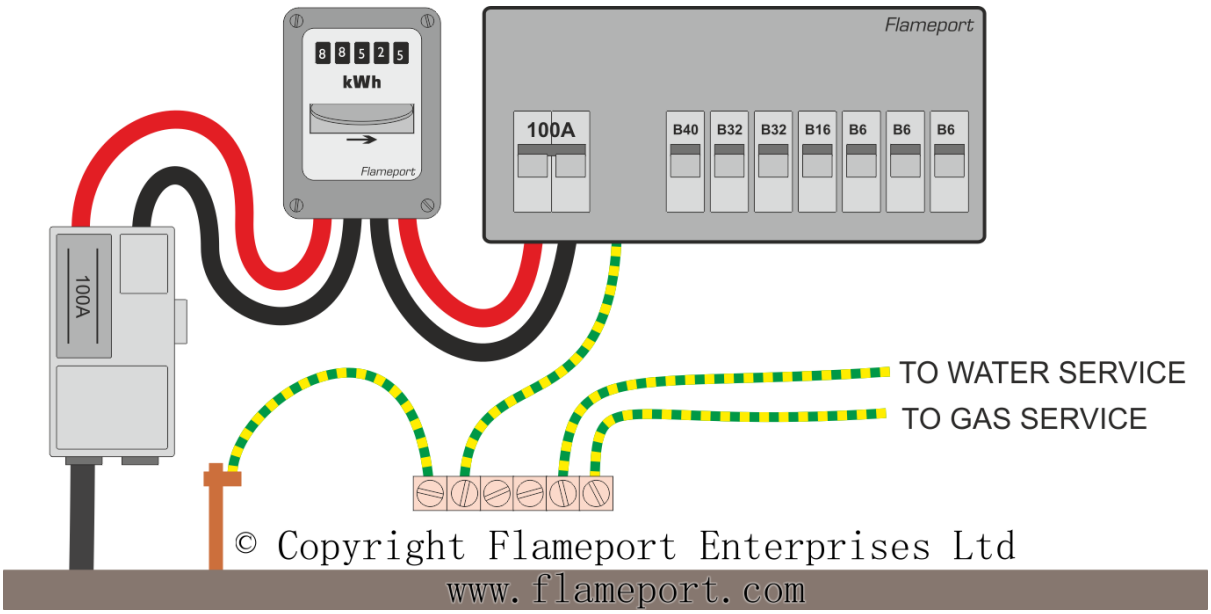
Old Colours